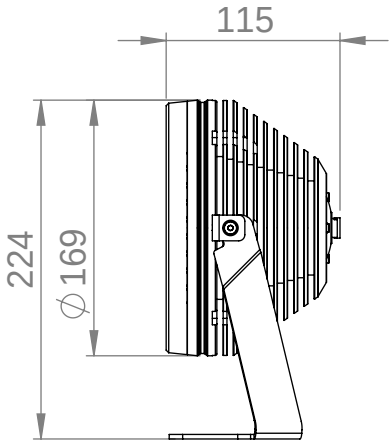

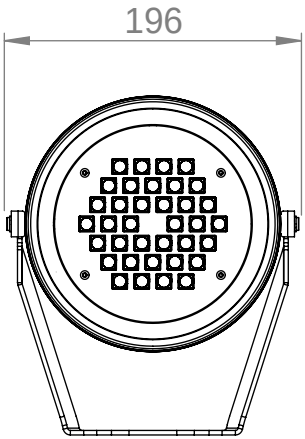

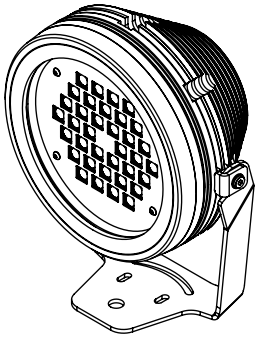

dled
Illumination technologies

HVX-36LED

1:5

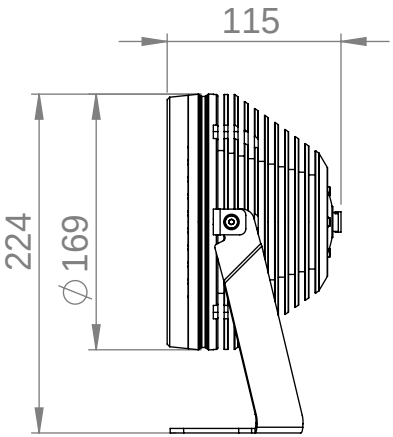

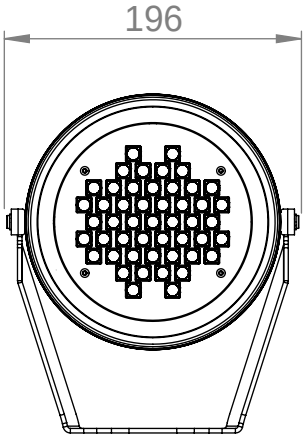

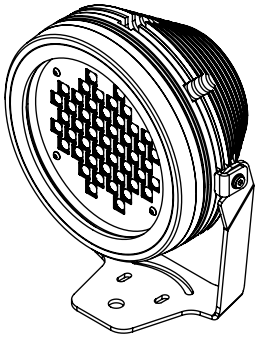

dled
Illumination technologies

HVX-48LED

1:5